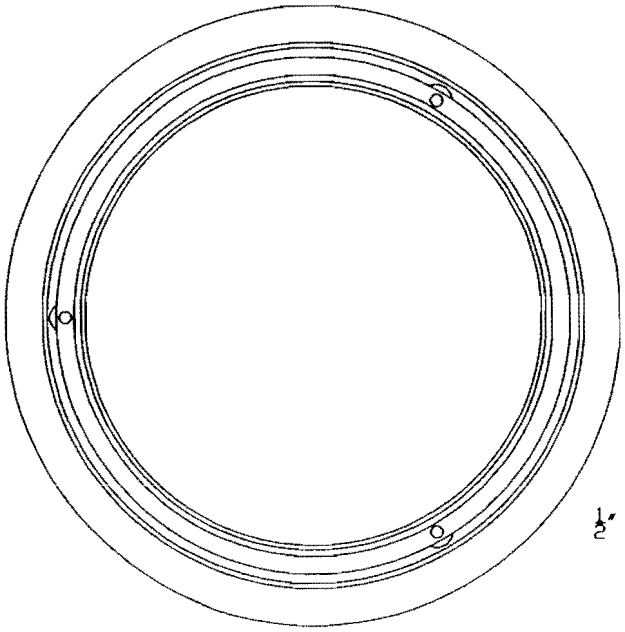

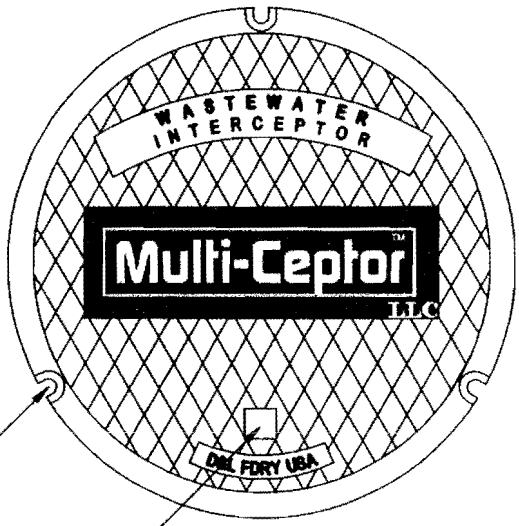

½" BOLT TYP

CLOSED PICK

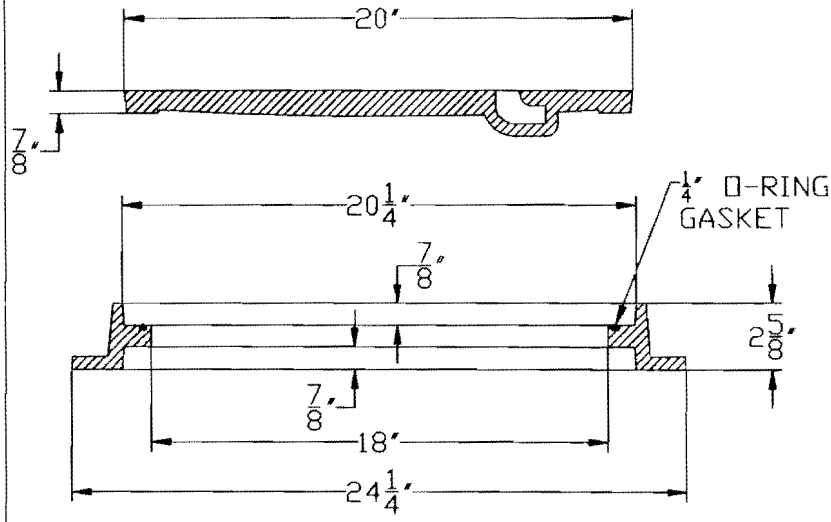

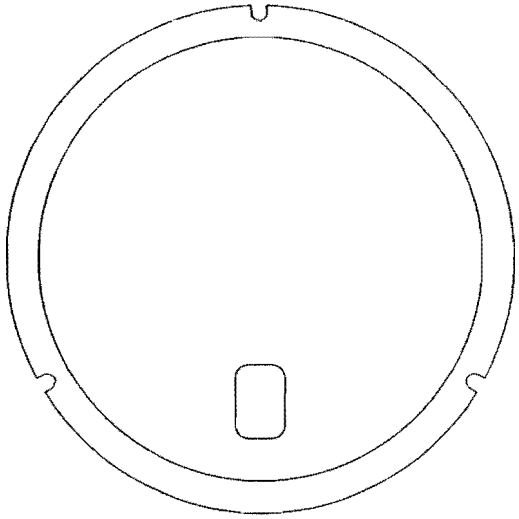

WEIGHT:
COVER: 71 LBS
RING: 51 LBS

CAST IRON TO CONFORM TO ASTM A-48, CLASS 30B MEETS H-20 LOAD RATING	B-5106 D&L MODEL #	**D&L** FOUNDRY & SUPPLY
	DRAWN BY: ADAM KROUPA D&L Foundry (Not to Scale)	CALIFORNIA SALES: (800)-422-0848 WASHINGTON SALES: (888)-765-0054
	DATE: 8-30-07	UTAH SALES: (800)-453-9802